TAURO TECHNOLOGIES

TT317 IGX Thor Controller

For Industrial and Robotics Applications

Key Features

- IGX Thor AI Performance
- zQSFP+ 4x 25G Ethernet
- RJ-45 1G Ethernet
- M.2 Expansion Interfaces
- SE050 TPM
- FSI in SoC
- Safety MCU
- Universal Flash Storage (UFS)

Applications

- Autonomous Transportation
- Medical
- Robotics
- Agriculture
- Mining
- UAV

Overview

The TT317 IGX Thor Controller is an industrial, IP20 compute platform based on the powerful NVIDIA® IGX T5000™ module, which integrates a 14-core ARM Poseidon-AE 64-bit CPU, an NVIDIA Blackwell Architecture GPU with 2560 CUDA® cores, 96 4th Gen Tensor Cores, and 128GB LPDDR5x DRAM running at 4266 MHz with 273 GB/s bandwidth. Designed for industrial, medical, and commercial deployment.

The TT317 delivers up to 2100 FP4 TFLOPs of AI compute, providing the performance needed for edge inference and real-time video analytics. It offers a comprehensive set of latest-generation interfaces on the IGX T5000, including a zQSFP+ interface, RJ-45 GbE interface, USB Type-C for KVM Interface, 8x protected Discrete IOs, 2x isolated CAN bus ports, M.2 M-Key Slot (PCIe x4), M.2 B-Key Slot (USB 2.0 and USB 3.2), M.2 E-Key Slot (PCIe x1 and USB 2.0), and USB 2.0. The zQSFP+ interface delivers high-performance, high-speed data transmission at up to 100 Gb/s, enabling the transfer of large amount of data with minimal latency.

The dedicated Functional Safety Island (FSI) in SoC is a redundant processor that, in pair with the Safety MCU, monitors and handles safety-critical workloads. This architecture facilitates compliance with strict industrial and medical safety standards. Additionally, the integrated UFS provides high-speed, reliable onboard storage to support rapid boot times and mission-critical data logging.

Key Advantages

- Powered by NVIDIA IGX T5000 Thor
- NVIDIA Blackwell GPU with 2560 CUDA® cores and 96 4th Gen Tensor Cores
- 14-core Arm® Poseidon-AE CPU with 4MB shared L3 Cache
- 3x M.2 Expansion Slots for LTE/5G, Wi-Fi/BT and Storage
- SE050 Secure Element for Secure AI & IoT Operations
- Functional Safety Island (FSI) in SoC and Safety MCU

Block Diagram

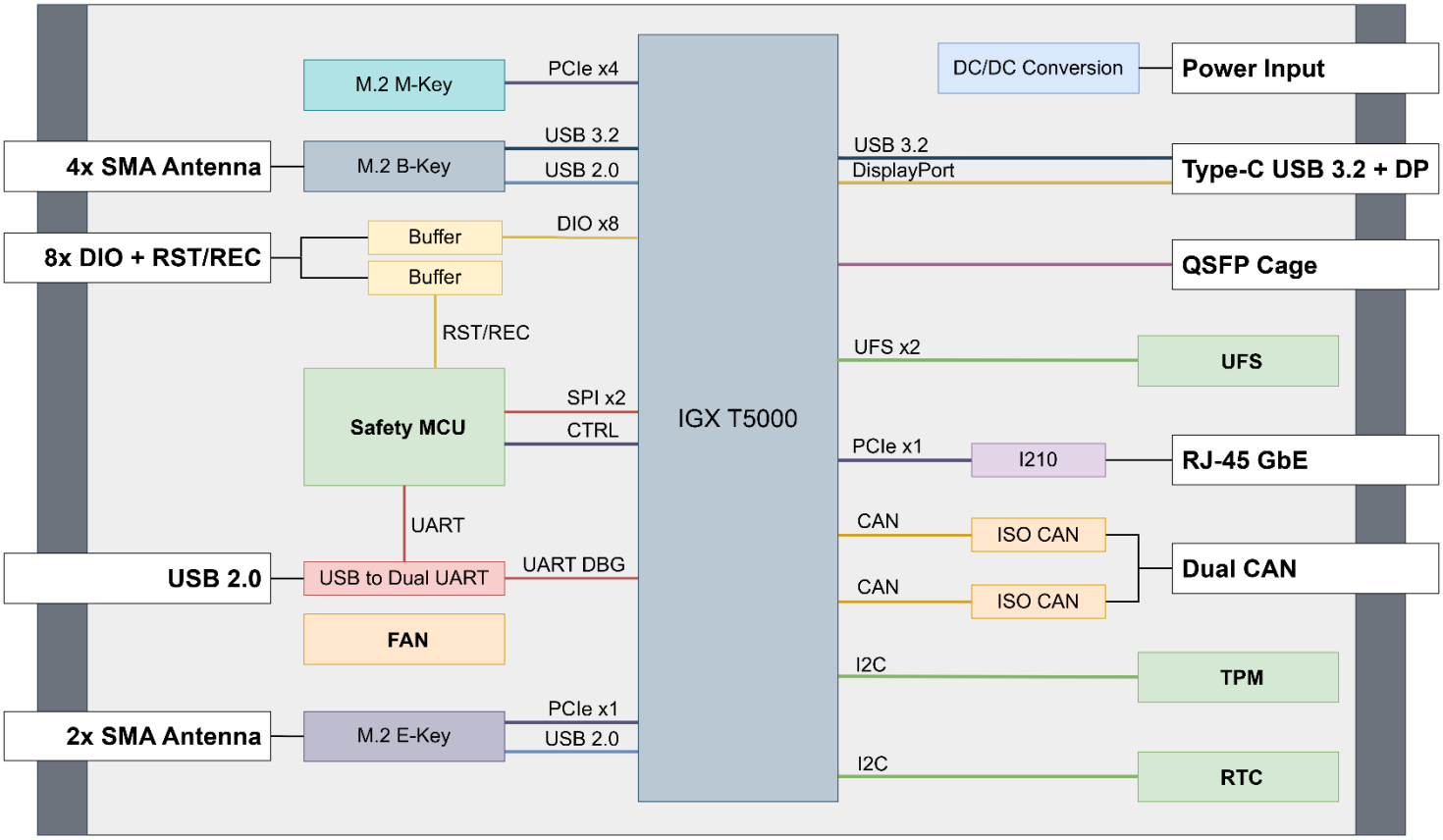

TAURO TECHNOLOGIES
9205 W. Russell Rd., Ste 240
Las Vegas, NV 89148
taurotech.com
Phone: +1 (725) 220-6100
Email: sales@taurotech.com

Visit Our Website

© 2026 Tauro Technologies LLC. All rights reserved. Features and specifications are subject to change without notice.

Specifications

SOM	NVIDIA® IGX T5000 up to 2070 FP4 TFLOPS
SYSTEM MEMORY	128GB LPDDR5x 4266MHz 256-bit, 273GB/s
DISPLAY INTERFACE	USB Type-C Display Port
ETHERNET	4x 25GbE LAN zQSFP+ Interface
	RJ-45 GbE Port
I/O	USB 3.2 Type-C + DP
	8x Protected Discrete I/O
	2x isolated CAN 2.0
EXPANSION	1x M.2 PCIe Slot M-Key PCIe x4 (for NVMe SSD)
	1x M.2 PCIe Slot E-Key PCIe x1 (for Wi-Fi/BT)
	1x M.2 PCIe Slot B-Key (for LTE/5G)
ADDITIONAL FEATURES	SE050 TPM
	RTC
	microUSB Serial Console Output (sMCU and SOM)
SAFETY	Functional Safety Island (FSI) in SoC
	Safety MCU
	Universal Flash Storage (UFS)
OS SUPPORT	Ubuntu 24.04
POWER	12V DC input
	Maximum 180W total power budget
DIMENSION	163 mm (W) x 155 mm (D) x 70 mm (H)

Environmental

OPERATING TEMPERATURE	-20°C to 60°C
STORAGE TEMPERATURE	-40°C to 85°C
HUMIDITY	10% to 90%, non-condensing
VIBRATION	Operating, MIL-STD-810H, Method 514.8, Category 4
SHOCK	Operating, MIL-STD-810H, Method 516.8, Procedure I
EMC	Designed to meet FCC, CE, and UL certifications, where applicable

TAURO TECHNOLOGIES

9205 W. Russell Rd., Ste 240
Las Vegas, NV 89148
taurotech.com

Phone: +1 (725) 220-6100
Email: sales@taurotech.com

Visit Our Website

© 2026 Tauro Technologies LLC. All rights reserved. Features and specifications are subject to change without notice.

Ordering Options

TT317-ABC-D00-000		
A = SOM	D = M.2 E-KEY [J32]	
0 = RESERVED 1 = IGX THOR T5000 128GB	0 = RESERVED	
B = M.2 M-KEY [J1]		
0 = RESERVED		
C = M.2 B-KEY [J14]		
0 = RESERVED		

The system can be customized for specific customer requirements, contact Tauro Technologies sales for details.

TAURO TECHNOLOGIES

9205 W. Russell Rd., Ste 240
Las Vegas, NV 89148
taurotech.com

Phone: +1 (725) 220-6100
Email: sales@taurotech.com

Visit Our Website

© 2026 Tauro Technologies LLC. All rights reserved. Features and specifications are subject to change without notice.